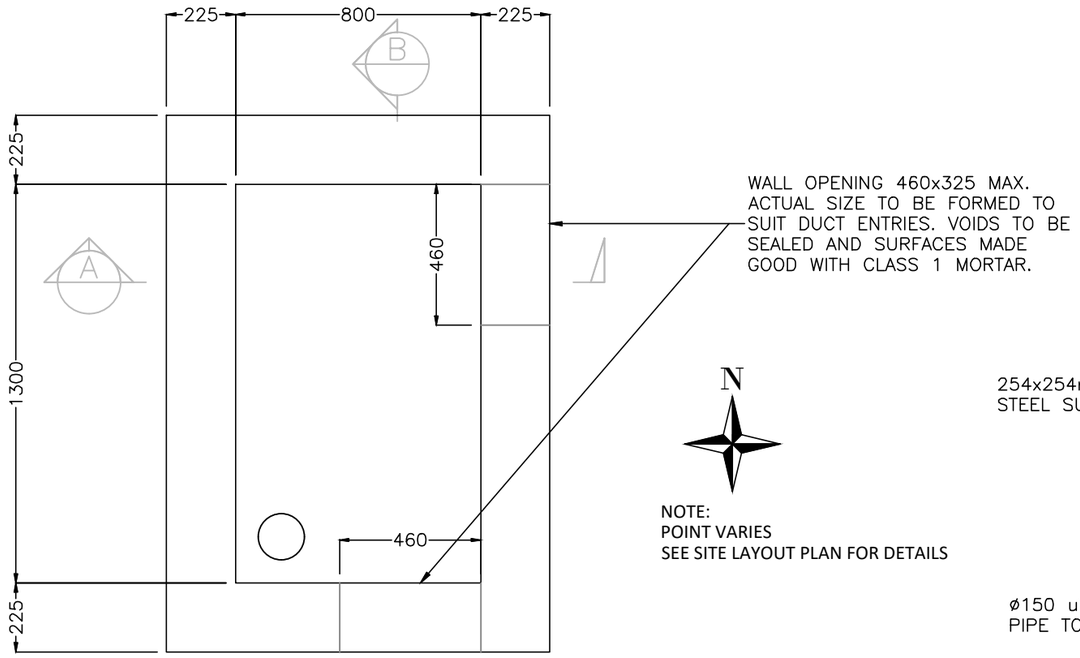

PLAN
SCALE 1:20

NOTE:
POINT VARIES
SEE SITE LAYOUT PLAN FOR DETAILS

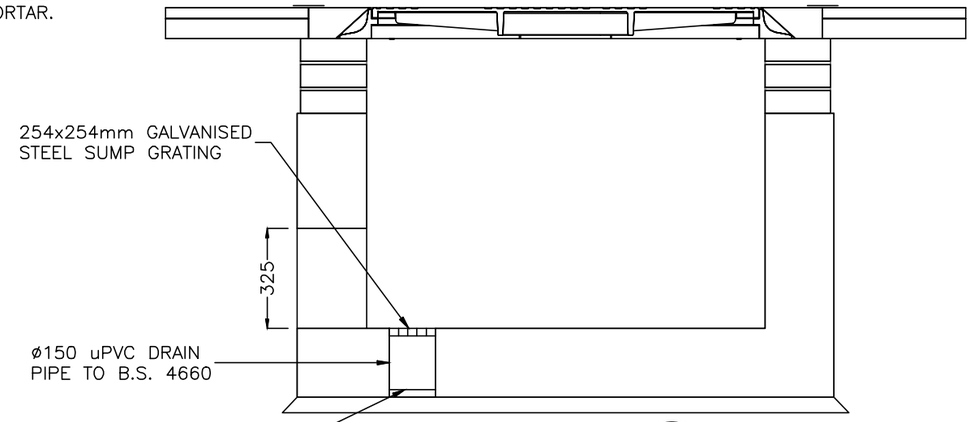

SECTION B
SCALE 1:20

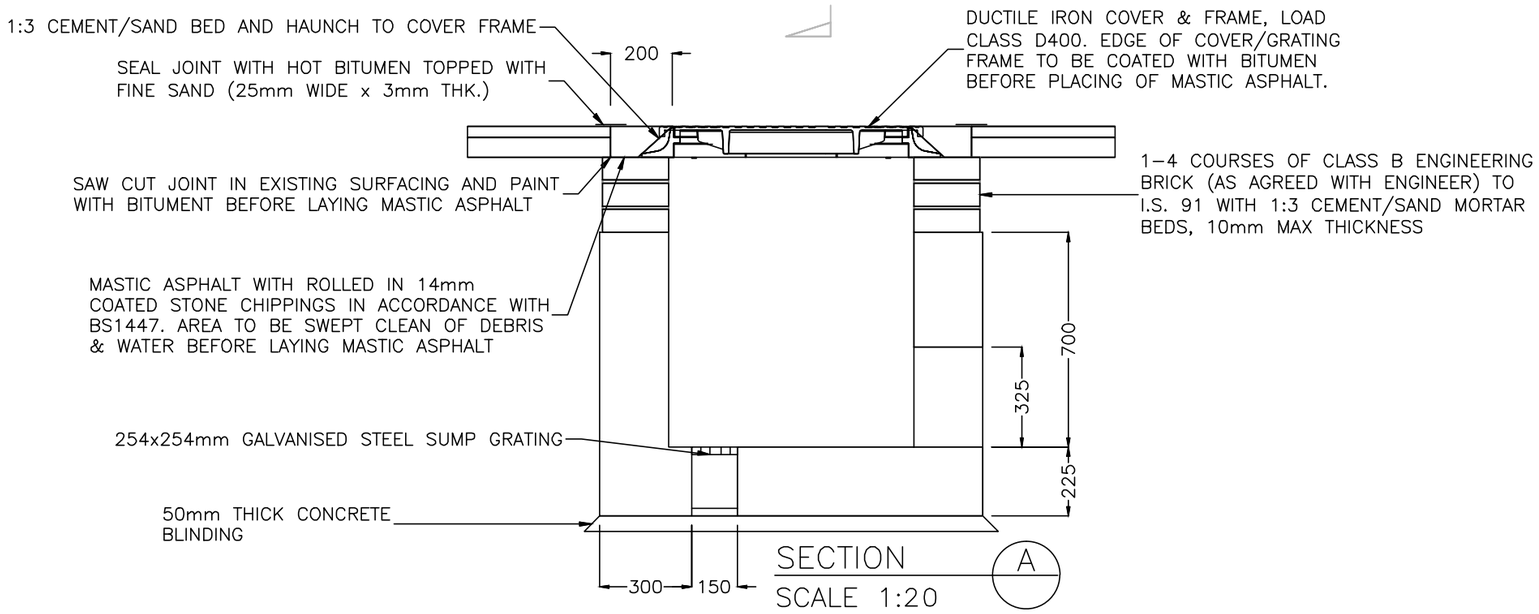

SECTION A
SCALE 1:20

Notes:

1. A surface cable marker (metallic plate; 300mm x150mm to ESB standard) will be placed on the bridge where cable depth is unavoidably shallow.
2. Requirements of Road Engineer will be facilitated at detailed design stage

rev.	modifications	by	chk	date

Client
Constant Energy Limited

Project
Proposed Tirawley Wind Farm &
110kV Grid Connection Route

Stage
Planning

Title
Grid Connection Route:
Link Box Chamber -
General Arrangement

Scales
1:20 (A3)

Surveyed	Drawn	Checked	Approved	Date
	LB	DT/MG	DK	07/2025

JENNINGS O'DONOVAN
an RSK company

© COPYRIGHT OF
JENNINGS O'DONOVAN AND PARTNERS LIMITED
FINISKLIN
SLIGO
IRELAND
Tel (+353) 719 161 416
Email. info@jodireland.com
www.jodireland.com

Drawing No.
6289-PL-GR-1308

Revision